CET-P08 (PT-08-0)

CHENYAO
- Professional Relay Socket -

Main Feature:

- Socket with PCB terminal.
- No reduction of protection class or creepage/clearance with plastic retainer.
- Easy replacement of relays.
- Socket can be used as connector for diagnosis function.
- Sockets and accessories: RoHS compliance (Directive 2002/95/EC).

RoHS

Socket with PCB-type terminal

Approvals: cULus UL CE

E306487

Accessories:

Metal Retainer:

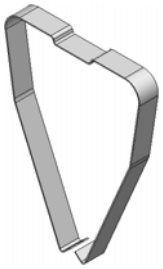

Technical data:

Rated current	10A
Rated voltage / max. Switching voltage AC	150/250 VAC
Dielectric strength coil-contact circuit	1,500 V_{rms}
Insulation resistance (at 500VDC)	100MΩ
Material group of insulation parts	≧IIIa
Insulation to IEC 60664-1	
Type of insulation coil-contact circuit	reinforced
Open contact circuit	functional
Rated insulation voltage	250V
Pollution degree	2
Rated voltage system	230/400V
Over voltage category	Ⅲ
RoHS Directive 2002/95/EC	
Sockets, retainers and marking tag:	compliant
Degree of protection DIN 40050	IP20
Ambient temperature range	-25...+55℃
Terminals	PCB
Insertion cycles	A (10)
Mounting distance	0, dense packing
Weight	9g
Packaging unit	100pcs.

Order Information:

CET - P 08

① ② ③

①	Item:	CET
②	Contact form:	P (for PCB Terminal) Q (for solder Lug Terminal)
③	Relay terminals:	08 (for 08 Terminals Relay) 14 (for 14 Terminals Relay)
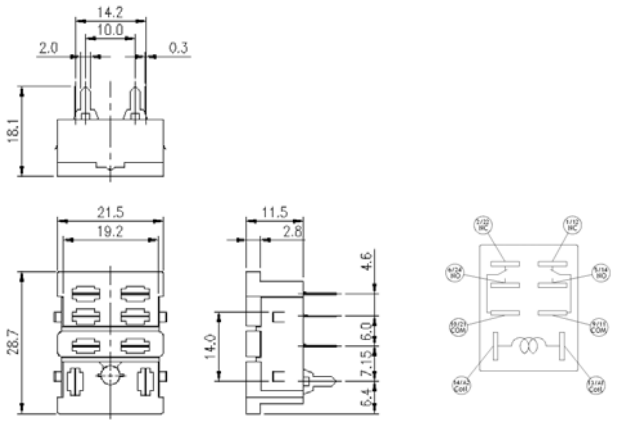
Dimension: